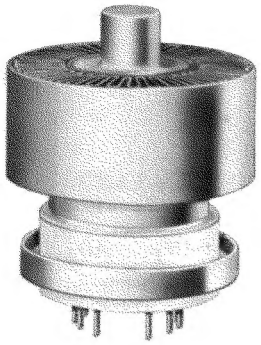

**Coaxial-Electrode Structure**
**Ceramic-Metal Seals**
**Full Ratings Up to 500 MHz**
**Forced-Air Cooled**
**380 Watts PEP Output at 30 MHz $AB_1$**
**570 Watts PEP Output at 30 MHz $AB_2$**
**300 Watts CW Output at 470 MHz**

# RCA-8122

# BEAM POWER TUBE

RCA-8122 is a very small, low-cost, forced-air-cooled beam power tube designed for use as an rf power amplifier, oscillator, regulator, distributed amplifier, or linear rf power amplifier in mobile or fixed equipment.

The 8122 features a light-weight, cantilever-supported cylindrical electrode structure within a ceramic-metal envelope. This construction provides a very sturdy tube and permits high-temperature operation.

The terminal arrangement of the 8122 facilitates use of the tube with tank circuits of the coaxial or strip-line type. Effective isolation of the output circuit from the input circuit is provided at the higher frequencies by the low-inductance ring terminal for grid-No.2. A base-pin termination for grid-No.2 is also available for operation of the 8122 at the lower frequencies.

The tripod arrangement of both the cathode and the grid-No.1 leads not only simplifies construction, but enhances electrical characteristics. The three cathode leads reduce the inductance path to rf ground and reduce the input admittance at high frequencies.

The three grid-No.1 leads to separate pins accomodate a split-input circuit for distributed amplifier service.

**INDEX** page


I. DESCRIPTION
- General Data . . . . . 1
- Ratings . . . . . 2
- Characteristics Range Values . . . . . 3
- Footnotes . . . . . 3
- Dimensional Outline . . . . . 4
- Basing Diagram . . . . . 5

II. CHARACTERISTICS
- Cooling . . . . . 5
- Characteristics Curves . . . . . 6,7,8

III. GENERAL APPLICATIONS
This bulletin is to be used in conjunction with the publication **Application Guide for RCA Power Tubes, 1CE-300.** For a copy, write RCA, Commercial Engineering, Harrison, N. J.


## GENERAL DATA

**Electrical:**

| | | |
|---|---|---|
| Heater, for Unipotential:Cathode: | | |
| Voltage (AC or DC)[a] | 13.5 ± 10% | volts |
| Current at 13.5 volts | 1.3 | A |
| Minimum heating time | 60 | s |
| Mu-Factor, Grid No.2 to Grid No.1 for plate volts = 450, Grid-No.2 volts = 325, and plate amperes = 1.2 | 12 | |
| Direct Interelectrode Capacitances:[b] | | |
| Grid No.1 to plate | 0.13 max. | pF |
| Grid No.1 to cathode | 16 | pF |
| Plate to cathode | 0.011 | pF |
| Grid No.1 to grid No.2 | 24 | pF |
| Grid No.2 to plate | 7.0 | pF |
| Grid No.2 to cathode | 2.6 | pF |
| Cathode to heater | 3.4 | pF |

**Mechanical:**

| | |
|---|---|
| Operating Position | Any |
| Maximum Overall Length | 2.26" |
| Seated Length | 1.920" ± 0.065" |
| Greatest Diameter | 1.625" ± 0.015" |
| Base | Large-Wafer Elevenar 11-Pin with Ring (JEDEC No.E11-81) |
| Socket | Erie▲No. 9802-000 and 9804-000, Johnson■No. 124-311-110, Mycalex* No. CP464-2, or equivalent |
| Grid No.2 Bypass Capacitor | Erie▲No. 2943-002, Johnson■No. 124-121, or equivalent |
| Weight (Approx.) | 3.5 oz |

▲ Erie Technological Products, Inc., 645 West 12th Street, Erie, Pa.
■ E. F. Johnson Co., 1921 10th Ave., S. W., Waseca, Minn.
* Mycalex Corp. of America, 775 Clifton Blvd., Clifton, N. J.

**Thermal:**

| | | |
|---|---|---|
| Terminal Temperature (All terminals) | 250 max. | °C |
| Radiator Core Temperature (See *Dimensional Outline*) | 250 max. | °C |
| Air Flow: See *Typical Cooling Requirements* on page 5. | | |


Information furnished by RCA is believed to be accurate and reliable. However, no responsibility is assumed by RCA for its use: nor for any infringements of patents or other rights of third parties which may result from its use. No license is granted by implication or otherwise under any patent or patent rights of RCA.



RADIO CORPORATION OF AMERICA
Electronic Components and Devices Harrison, N. J.

Trademark(s) ® Registered
Marca(s) Registrada(s)

8122 6-66
*Supersedes 8122 10-61*
Printed in U.S.A.

## LINEAR RF POWER AMPLIFIER
### Single-Sideband Suppressed-Carrier Service[c]

*Peak envelope conditions for a signal having a minimum peak-to-average power ratio of 2*

**Maximum CCS Ratings,** *Absolute-Maximum Values:*

| | | | |
|---|---|---|---|
| DC PLATE VOLTAGE: | | | |
| Up to 30 MHz | 3000[d] | max. | volts |
| Up to 500 MHz | 2200 | max. | volts |
| | *Up to 500 MHz* | | |
| DC GRID-No.2 VOLTAGE | 400 | max. | volts |
| DC GRID-No.1 VOLTAGE | −100 | max. | volts |
| DC PLATE CURRENT AT PEAK OF ENVELOPE | 450[e] | max. | mA |
| DC GRID-No.1 CURRENT | 100 | max. | mA |
| PLATE DISSIPATION | 400 | max. | watts |
| GRID-No.2 DISSIPATION | 8 | max. | watts |
| PEAK HEATER-CATHODE VOLTAGE: | | | |
| Heater negative with respect to cathode | 150 | max. | volts |
| Heater positive with respect to cathode | 150 | max. | volts |
| **Maximum Circuit Values:** | | | |
| Grid-No.1 Circuit Resistance Under Any Condition:[i] | | | |
| With fixed bias | 25000 | max. | ohms |
| With fixed bias (In Class $AB_1$ operation) | 100000 | max. | ohms |
| With cathode bias | Not recommended | | |
| Grid-No.2 Circuit Impedance[h] | 10000 | max. | ohms |
| Plate Circuit Impedance[d] | See Note[f] | | |

**Typical CCS Operation at 30 MHz with "Two-Tone Modulation":**

| | $AB_1$ | $AB_2$ | |
|---|---|---|---|
| DC Plate Voltage | 2000 | 2500 | volts |
| DC Grid-No.2 Voltage | 400 | 400 | volts |
| DC Grid-No.1 Voltage | −35 | −35 | volts |
| Zero-Signal DC Plate Current | 100 | 115 | mA |
| Effective RF Load Resistance | 3050 | 3500 | ohms |
| DC Plate Current at Peak of Envelope | 335 | 400 | mA |
| Average DC Plate Current | 250 | 275 | mA |
| DC Grid-No.2 Current at Peak of Envelope | 10 | 6 | mA |
| Average DC Grid-No.2 Current | 7 | 4 | mA |
| DC Grid-No.1 Current at Peak of Envelope | 0.05[g] | 3 | mA |
| Peak-Envelope Driver Power Output (Approx.) | 0.3 | 0.5 | watt |
| Output-Circuit Efficiency (Approx.) | 90 | 90 | % |
| Distortion Products Level: | | | |
| Third order | 29[k] | 28 | dB |
| Fifth order | 32 | 32 | dB |
| Useful Power Output (Approx.): | | | |
| Average | 190 | 285 | watts |
| Peak envelope | 380 | 570 | watts |

## RF POWER AMPLIFIER & OSCILLATOR – Class C Telegraphy[c]
## and
## RF POWER AMPLIFIER – Class C FM Telephony[c]

**Maximum CCS Ratings,** *Absolute-Maximum Values:*

| | | | |
|---|---|---|---|
| | *Up to 500 MHz* | | |
| DC PLATE VOLTAGE | 2200 | max. | volts |
| DC GRID-No.2 VOLTAGE | 400 | max. | volts |
| DC GRID-No.1 VOLTAGE | −100 | max. | volts |
| DC PLATE CURRENT | 300 | max. | mA |
| DC GRID-No.1 CURRENT | 100 | max. | mA |
| GRID-No.2 DISSIPATION | 8 | max. | watts |
| PLATE DISSIPATION | 400 | max. | watts |
| PEAK HEATER-CATHODE VOLTAGE: | | | |
| Heater negative with respect to cathode | 150 | max. | volts |
| Heater positive with respect to cathode | 150 | max. | volts |
| **Maximum Circuit Values:** | | | |
| Grid-No.1 Circuit Resistance Under Any Condition: | | | |
| With fixed bias | 25000 | max. | ohms |
| Grid-No.2 Circuit Impedance | 10000 | max. | ohms |
| Plate Circuit Impedance | See Note[f] | | |

**Typical CCS Operation:**

| | | | | | |
|---|---|---|---|---|---|
| *In Grid-Drive Circuit at 50 MHz* | | | | | |
| DC Plate Voltage | 700 | 1000 | 1500 | 2000 | volts |
| DC Grid-No.2 Voltage | 175 | 200 | 200 | 200 | volts |
| DC Grid-No.1 Voltage | −10 | −30 | −30 | −30 | volts |
| DC Plate Current | 300 | 300 | 300 | 300 | mA |
| DC Grid-No.2 Current | 25 | 20 | 20 | 20 | mA |
| DC Grid-No.1 Current | 50 | 40 | 40 | 30 | mA |
| Driver Power Output (Approx.) | 1.2 | 2 | 2 | 2 | watts |
| Useful Power Output | 120 | 175 | 275 | 375 | watts |
| *In Grid-Drive Circuit at 470 MHz* | | | | | |
| DC Plate Voltage | 700 | 1000 | 1500 | 2000 | volts |
| DC Grid-No.2 Voltage | 200 | 200 | 200 | 200 | volts |
| DC Grid-No.1 Voltage | −30 | −30 | −30 | −30 | volts |
| DC Plate Current | 300 | 300 | 300 | 300 | mA |
| DC Grid-No.2 Current | 10 | 10 | 5 | 5 | mA |
| DC Grid-No.1 Current | 30 | 30 | 30 | 30 | mA |
| Driver Power Output (Approx.) | 5 | 5 | 5 | 5 | watts |
| Useful Power Output | 100 | 165 | 235 | 300 | watts |

## PLATE-MODULATED RF POWER AMPLIFIER – Class C Telephony

*Carrier conditions per tube for use with a max. modulation factor of 1.0*

**Maximum CCS Ratings,** *Absolute-Maximum Values up to 500 MHz:*

| | | | |
|---|---|---|---|
| DC PLATE VOLTAGE | 1800 | max. | volts |
| DC GRID-No.2 VOLTAGE | 400 | max. | volts |
| DC GRID-No.1 VOLTAGE | −100 | max. | volts |
| DC PLATE CURRENT | 250 | max. | mA |
| DC GRID-No.1 CURRENT | 100 | max. | mA |
| GRID-No.2 INPUT | 5 | max. | watts |
| PLATE DISSIPATION | 280 | max. | watts |

## CHARACTERISTICS RANGE VALUES

| | Note | Min. | Max. | |
|---|---|---|---|---|
| 1. Heater Current . . . . . | 1 | 1.15 | 1.45 | A |
| 2. Direct Interelectrode Capacitances: | | | | |
| Grid No.1 to plate . . . | 2 | — | 0.13 | pF |
| Grid No.1 to cathode . | 2 | 14.3 | 17.7 | pF |
| Plate to cathode . . . . | 2 | 0.0065 | 0.0155 | pF |
| Grid No.1 to grid No.2 | 2 | 20.8 | 25.2 | pF |
| Grid No.2 to plate . . . | 2 | 6.3 | 7.7 | pF |
| Grid No.2 to cathode . | 2 | 2.0 | 3.0 | pF |
| Cathode to heater . . . | 2 | 2.5 | 4.1 | pF |
| 3. Grid-No.1 Voltage . . . . . | 1,3 | −8 | −19 | volts |
| 4. Reverse Grid-No.1 Current | 1,3 | — | −25 | μA |
| 5. Grid-No.2 Current . . . . . | 1,3 | −5 | +6 | mA |
| 6. Peak Emission . . . . . | 1,4 | 13 | — | peak A |
| 7. Interelectrode Leakage Resistance . . . . . | 5 | 50 | — | megohm |
| 8. Zero Bias Plate Current . | 1,6 | 1.0 | 1.8 | A |

Note 1: With 13.5 volts ac or dc on heater.

Note 2: Measured with special shield adapter.

Note 3: With dc plate voltage at 700 volts, dc grid-No.2 voltage of 250 volts, and dc grid-No.1 voltage adjusted to give a dc plate current of 185 mA.

Note 4: For conditions with grid No.1, grid No.2, and plate tied together; and pulse voltage source connected between plate and cathode. Pulse duration is 2.5 microseconds and pulse repetition frequency is 60 pps. The voltage-pulse amplitude is 200 volts peak. After 1 minute at this value, the current-pulse amplitude will not be less than the value specified.

Note 5: Under conditions with tube at 20° to 30° C for at least 30 minutes without any voltages applied to the tube. The minimum resistance between any two electrodes as measured with a 200-volt Megger-type ohmmeter having an internal impedance of 1.0 megohm, will be no less than the valve specified.

Note 6: With dc plate voltage of 450 volts, dc grid No.2 voltage of 400 volts, dc grid No.1 voltage of −100 volts, grid drive voltage to zero. With pulse duration of 4500 to 5000 μs and pulse repetition frequency is 10 to 12 pps.

## FOOTNOTES

[a]Because the cathode is subjected to back bombardment as the frequency is increased with resultant increase in temperature, the heater voltage should, for optimum life, be reduced to a value such that at the heater voltage obtained at minimum supply voltage conditions (all other voltages constant) the tube performance just starts to show some degradation; e.g., at 470 MHz heater volts = 12.5 (approx.).

[b]Measured with special shield adapter.

[c]See Section V.C. of 1CE-300.

[d]For operation above 2200 plate volts, the tube shall see an effective plate-supply impedance of no less than 750 ohms. A fault current limiting resistor of no less than 15 ohms is to be used between the output filter capacitance and the tube plate. The plate-supply-output-filter capacitance is to be no greater than 10 μF.

[e]The maximum rating for a signal having a minimum peak-to-average power ratio less than 2, such as is obtained in "Single-Tone" operation, is 300 mA. During short periods of circuit adjustment under "Single-Tone" conditions, the average plate current may be as high as 450 mA.

[f]The tube should see an effective plate supply impedance which limits the peak current through the tube under surge conditions to 15 amperes.

[g]This value represents the approximate grid-No.1 current obtained due to initial electron velocities and contact-potential effects when grid No.1 is driven to zero volts at maximum signal.

[h]A fault current limiting resistor of no less than 320 ohms is to be used between the screen output filter capacitance and the tube screen. The screen supply output filter capacitance is to be no greater than 80 μF.

[i]A fault current limiting resistor of no less than 20 ohms is to be used between the bias supply output filter capacitance and the tube grid-No.1. The bias supply output filter capacitance is to be no greater than 150 μF.

[k]The value of third order distortion product level shown may be improved by approximately 5 dB by utilizing an unbypassed, non-inductive 20-ohm resistor between the cathode and ground; a slight increase in drive power will be required.

## DIMENSIONAL OUTLINE

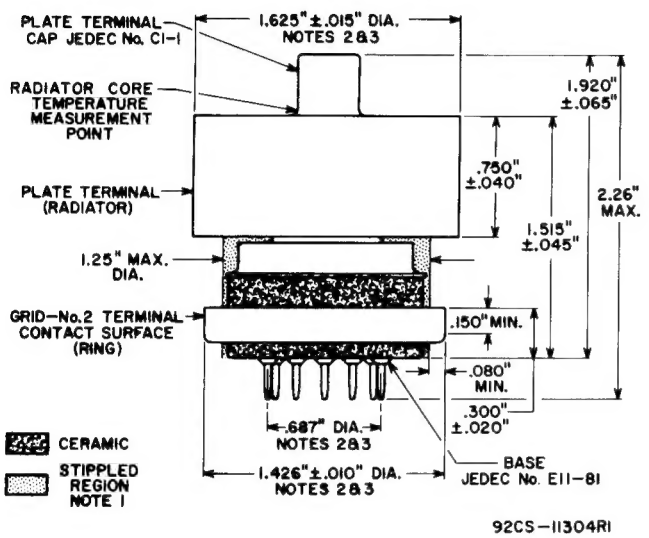


**NOTE 1:** Keep all stippled regions clear. Do not allow contacts or circuit components to protrude into these annular volumes.

**NOTE 2:** The diameters of the radiator, grid-No.2 terminal contact surface, and pin circle to be concentric within the following values of maximum full indicator reading:

| | |
|---|---|
| Radiator to Grid-No.2 | |
| Terminal Contact Surface . . . . | 0.030" max. |
| Radiator to Pin Circle . . . . . | 0.040" max. |
| Grid-No.2 Terminal Contact. . . . . | |
| Surface to Pin Circle . . . . . | 0.030" max. |

**NOTE 3:** The full indicator reading is the maximum deviation in radial position of a surface when the tube is completely rotated about the center of the reference surface. It is a measure of the total effect of run-out and ellipticity.

## BASE DRAWING
## LARGE-WAFER ELEVENAR
## 11-PIN WITH RING
## JEDEC No.E11-81

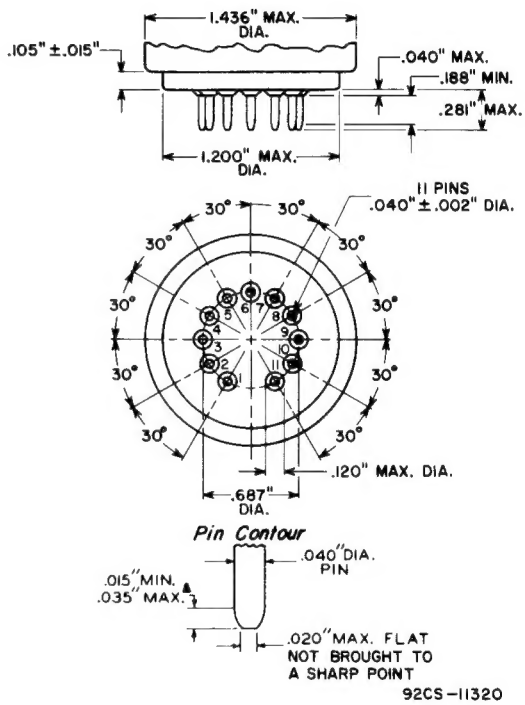


* This dimension around the periphery of any individual pin may vary within the limits shown.

## BASING DIAGRAM

**Bottom View**

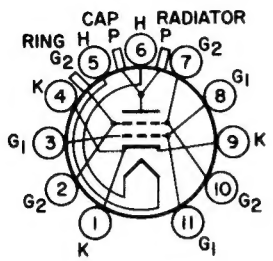


Pin 1: Cathode
Pin 2: Grid No.2
Pin 3: Grid No.1
Pin 4: Cathode
Pin 5: Heater
Pin 6: Heater
Pin 7: Grid No.2
Pin 8: Grid No.1
Pin 9: Cathode
Pin 10: Grid No.2
Pin 11: Grid No.1
Cap: Plate Terminal
Radiator: Plate Terminal
Ring: Grid-No.2 Terminal Contact Surface (For use at higher frequencies)

## GAUGE DRAWING

**JEDEC No.GE11-1**

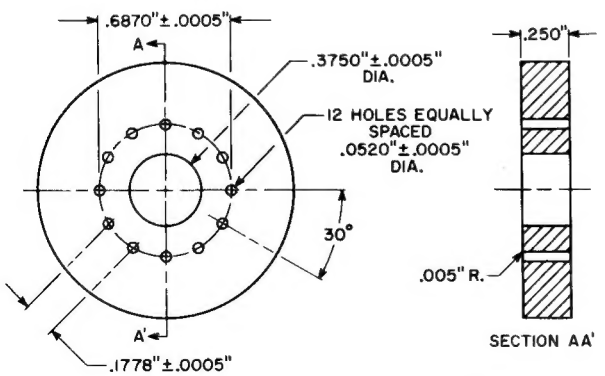


92CS-11310

## TYPICAL COOLING REQUIREMENTS

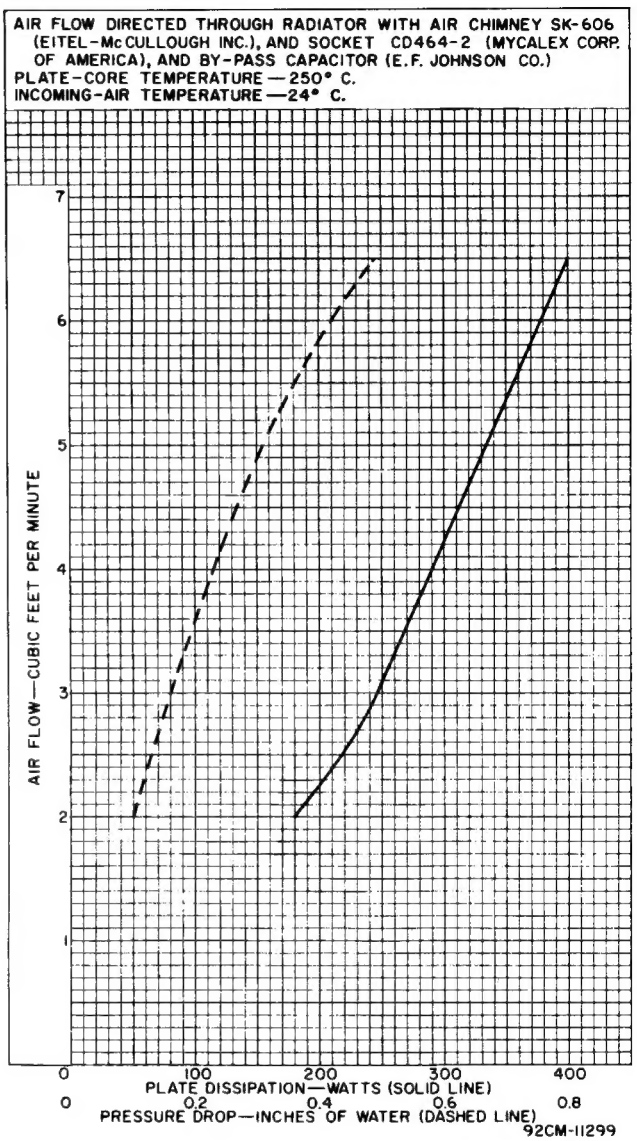


92CM-11299

## REFERENCES

1. Application Guide for RCA Power Tubes, 1CE-300.
2. J. F. Gaylord, "The Conduction Cooling of Power Tubes in Vehicular Communication Equipment", IEEE Transactions on Vehicular Communication, September, 1963.

## TYPICAL CONSTANT-CURRENT CHARACTERISTICS

**For Grid-No.2 Voltage = 400 Volts**

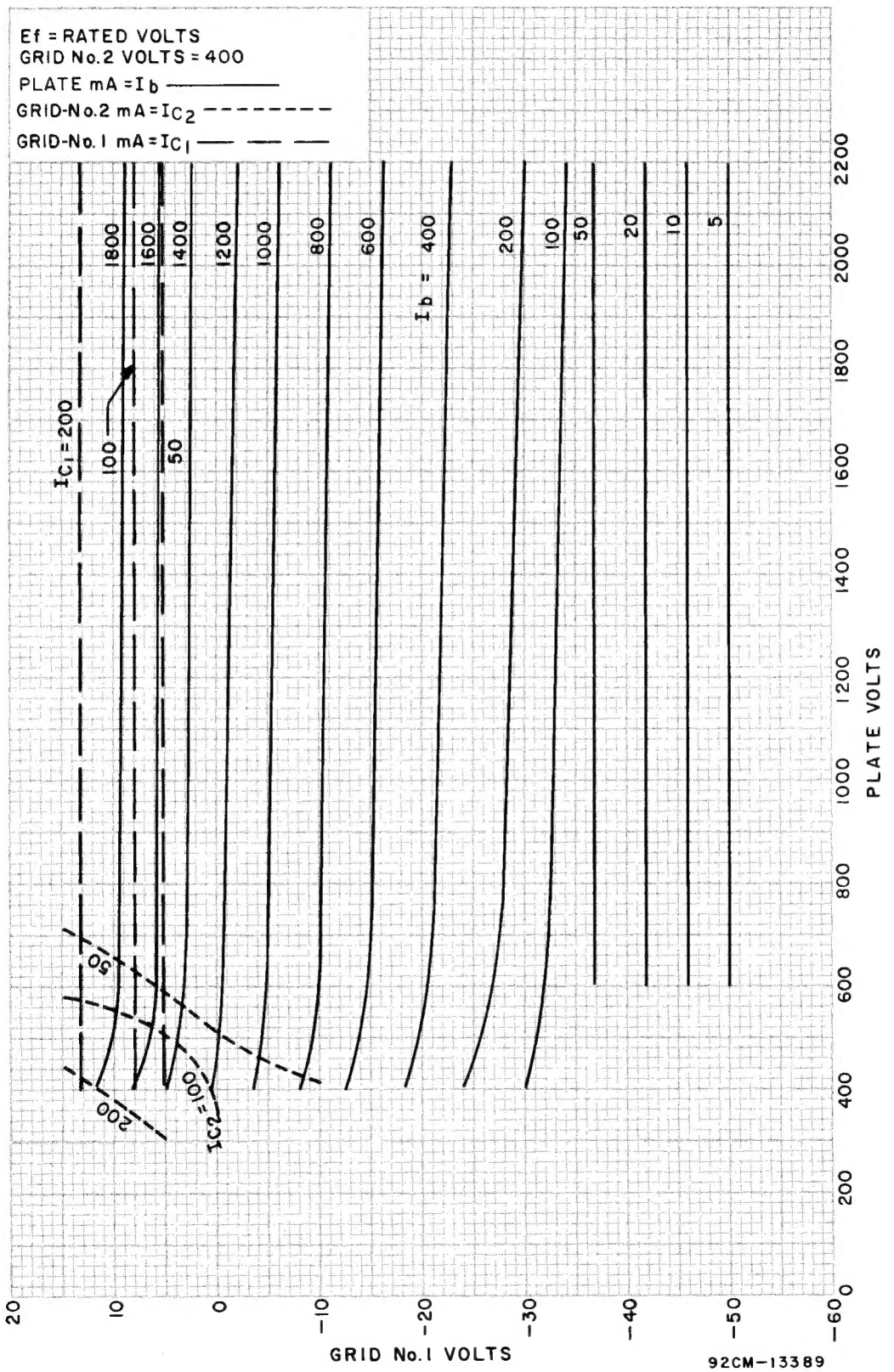

## TYPICAL PLATE CHARACTERISTICS

For Grid-No.2 Voltage = 400 Volts

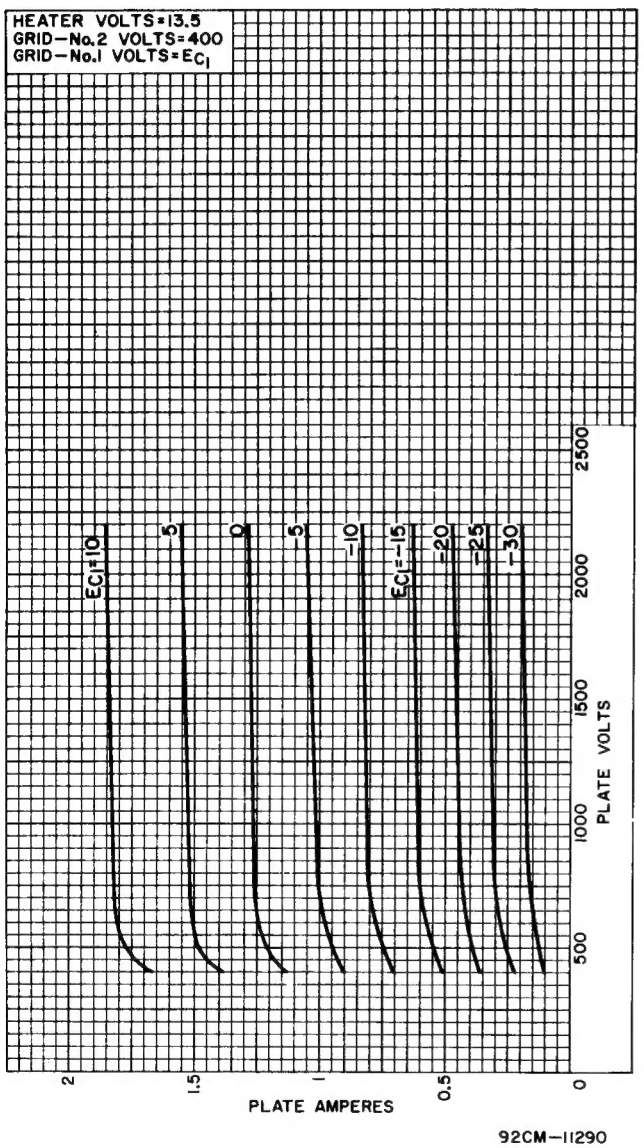


92CM-11290

## TYPICAL CHARACTERISTICS

For Grid-No.2 Voltage = 400 Volts

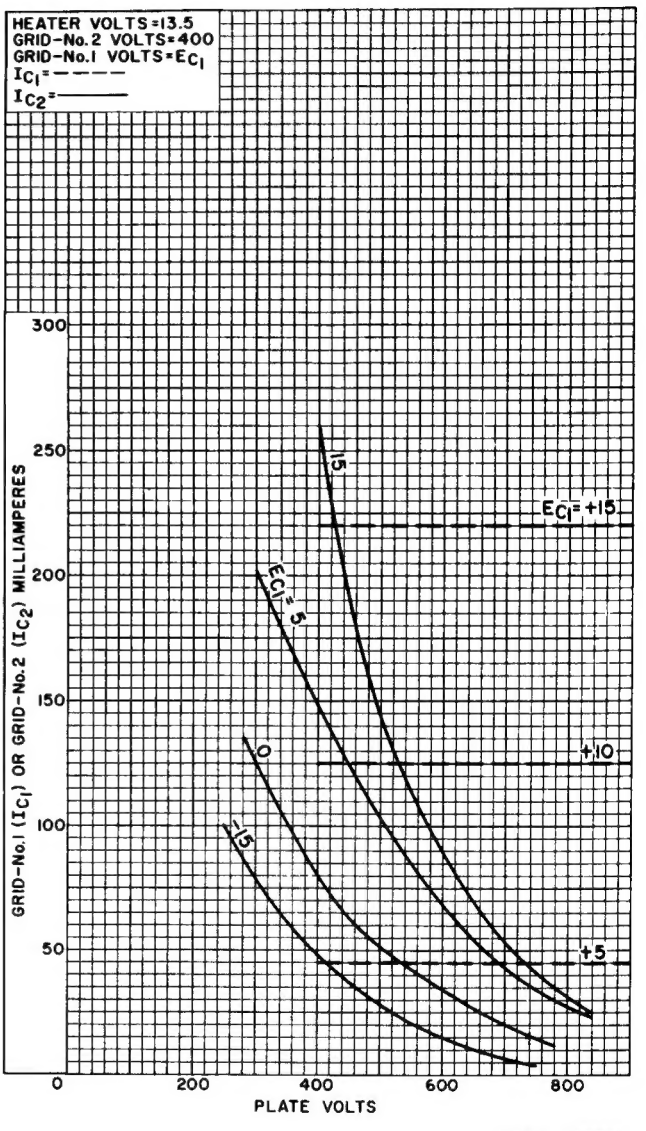


92CM-11293R1

## TYPICAL CONSTANT-CURRENT CHARACTERISTICS
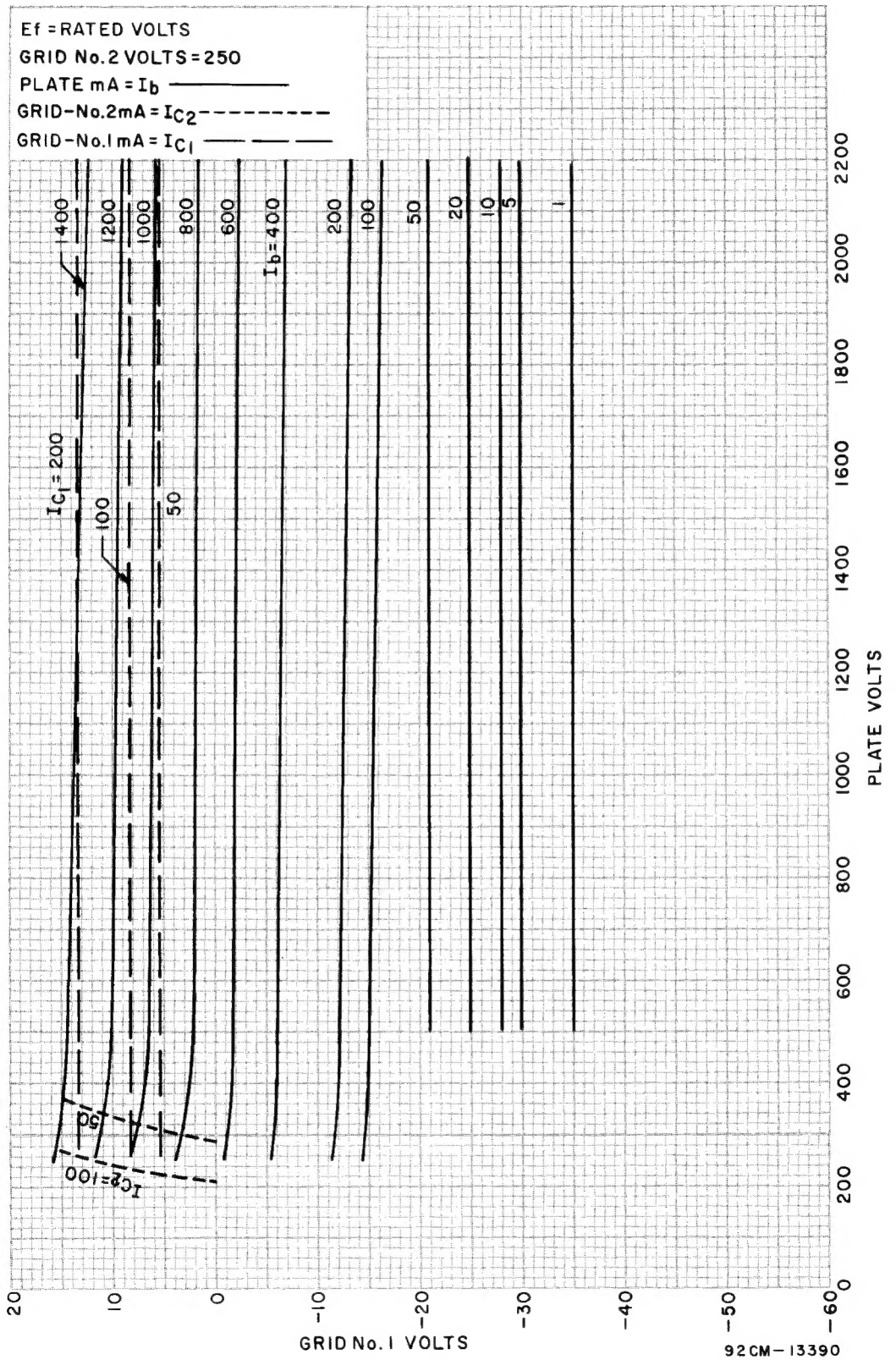
**For Grid-No.2 Voltage = 250 Volts**